MODEL "L" CECOSTAMP

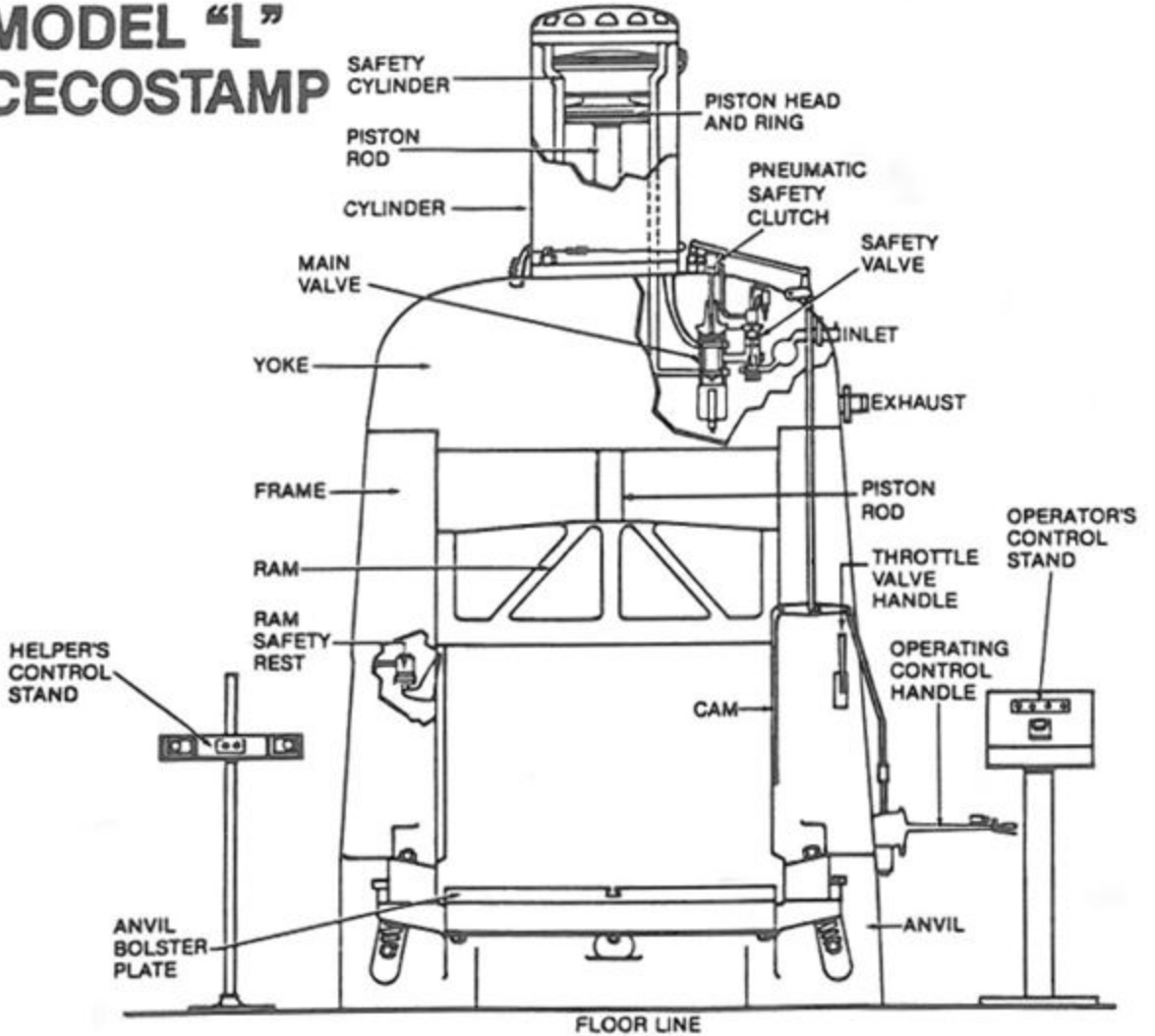

SECTION X - PARTS LIST AND LINE DRAWINGS

PARTS LIST - MODEL "L" CECOSTAMP

Part No.	Name	Part No.	Name
1	Anvil	125	Throttle Valve Arm
3F	Frame	133	Safety Valve Spring
3R	Frame	136A	R.H. Adjusting Wedge
4F	Frame	136B	L.H. Adjusting Wedge
4R	Frame	137	Wearing Plate
5	Ram	138	Wearing Plate
6	Piston Rod	140	Wearing Plate
7	Yoke	141	Wearing Plate
8	Cylinder	145	Clamp
9	Cylinder Cover	150	Piston Gland Stud
10	Main Valve	155	Washer
11	Main Valve Seat	156	Frame-Yoke Stud
12	Valve Stem Plug	157	Washer
14	Main Valve Cover	160	Bearing
15	Main Valve Link	161	Bearing
16	Rocker Lever	163	Stud or Bolt
17	Throttle Valve	169	Chevron Packing
19	Intermediate Lever	170	Chevron Packing
21	Inlet Gland	196	U-Bolt
22	Exhaust Gland	197	Pin
23	Piston Gland Flange	198	Washer
24	Bushing	199	Arm
26	Pipe Nipple	200	Arm Spacer
27	Pipe Nipple	201	Self Retaining Nut
31	Cam Lever	205	Bushing
34	Segment	206	Piston Gland Body
36	Cam	207	Throttle Arm
38	Bushing	215	Rocker Arm
39	Frame-to-Anvil stud	216	Rocker Shaft
40	Washer	217	Spring
41	Piston Ring	219	Intermediate Shaft
42	Taper Pin	220	Throttle Shaft
48	Connecting Rod	222	Throttle Connection
54	Cam Shaft	235	Gasket
73	Frame-Anvil Spring	239	Inlet Packing
74	Frame-Yoke Spring	240	Exhaust Packing
75	Spring	256	Frame-Yoke Stud
76	Tie Bar Spring	267	Cylinder-to-Yoke Stud
83	Lubricator	277	Orifice Nipple
94	Tie Bar	280	Bolt
95	Tie Bar	283	Cable
96	Safety Rest Cylinder	284	Cable
97	Safety Rest	300	Valve Safety Cover
98	Piston	301	Valve Safety Cylinder
100	Cup Packing	302	Vavle Safety Seat
103	Chevron Packing	303	Safety Valve
119	Rocker Connection	304	Valve Safety Stem
120	Bracket	305	Cup Packing
121	Pad	306	Washer
123	Throttle Vavle Connection	311	Pin
124	Connecting Rod	312	Pin

SECTION X - PARTS LIST AND LINE DRAWINGS

PARTS LIST - MODEL "L" CECOSTAMP

Part No.	Name
315	Pad
325	Plain Washer
340	Grommet Bushing
349	O Ring
350	O Ring
351	O Ring
355	O Ring
357	Segment
363	Plain Washer
364	Segment Stud
365	Stud
370	Bearing
380	Jam Nut
381	Wrench
382	Eyebolt
390	O Ring
393	O Ring
402	Push Button
405	Consolette
406	Base
407	Directional Valve
408	Check Valve
410	Cylinder
412	Pin
413	Piston
414	U Cup Packing
415	Cap
416	O Ring
417	U Cup Packing
418	Washer
419	Retaining Ring
420	Needle Valve
421	Limit Switch
422	Male Tube Elbow
423	Tubing
424	Nipple
426	Bushing
427	Collar
430	Flow Valve
431	Trip Valve
432	Orifice Nipple
434	Pressure Switch
436	Pushbutton
437	Light
438	Lens
443	Station
447	Female Receptacle Connector
448	Male Plug Connector
449	Pipe
450	Stand
452	Control Cable
453	Plug Adapter
454	Cable Bushing
455	Straight Connector
456	Lens
457	Name Plate
458	Name Plate
459	Name Plate
460	Support
461	Handle
462	Bracket
463	Washer
464	Manifold
465	Quick Exhaust Valve
466	Gasket
467	Male Outlet Tube Tee
468	Tube End Reducer
469	Male Tube Connector
470	Tube Union
471	Washer
474	Adapter
475	Hose
490	Quick Exhaust Valve
491	Directional Valve
492	Directional Valve
493	Directional Valve
494	Junction Box
495	Joystick
496	Valve Plate
497	Tee
498	Bolt
504	Selector Switch
505	Nameplate
508	Support Clamp
509	Adapter
510	Adapter
511	Adapter
512	Support Clamp
513	Adapter
514	Support
515	Filter
516	Lubricator
517	Selector Switch
518	Lens
750	Paint
799	Name Plate
1001	Bolster Plate
1002	Dowel
1003	Knockout Pin
1047	Turnbuckle
1050	Pin
1201	Bearing
1402	Handle
1403	Latch

PARTS LIST - MODEL "L" CECOSTAMP (cont'd)

Part No.	Name
1404	Strap
1406	Bushing
1407	Rod
1408	Connection
1409	Spring
1413	Adjusting Screw
1414	Lock Nut
1415	Control Handle
1416	Connection Collar
1417	Support Shaft
1421	Lock Sleeve
1422	Switch Guard
1423	Ball Joint
1424	Pin
1425	Thrust Bearing
1430	Bearing
1501	Bearing
1631	Bolt
2071	Bearing
2191	Bearing
2201	Bearing
2221	Bearing
3101	Bearing
3151	Pad
3404	Plunger
3407	Spring
3501	Throttle Valve Handle
3502	Throttle Valve Lever
3503	Washer
4641	Cap Screw
5001	Ram Bushing
6001	Piston Head
7501	Flexible Inlet Conn.
7502	Flexible Exhaust Conn.
7503	Exhaust Muffler
7504	Clevis Hanger
7505	Manifold
7506	Support
7508	Threaded Rod
7509	Pipe Tee
7510	Clevis Hanger
7511	Pipe Nipple
7512	Pipe Union
7513	Pipe Tee
7514	Pipe Nipple
7515	Nipple
7516	Pipe
7520	Conduit Outlet
7521	Elbow
7522	Rigid Conduit
9001	Plunger

Part No.	Name
9006	Piston Ring
9007	Gasket
9008	O Ring
9101	Starter
9102	Enclosure
9103	Transformer
9104	Fuse
9105	Relay
9106	Socket
9109	Fuse
9126	Processor
9126A	Battery
9127	Memory
9129	Surge Suppressor
9134	A.B. users Manual
9135	Programmer
9599	Silica Gel Pad
9801	Bearing
9999	Instructions

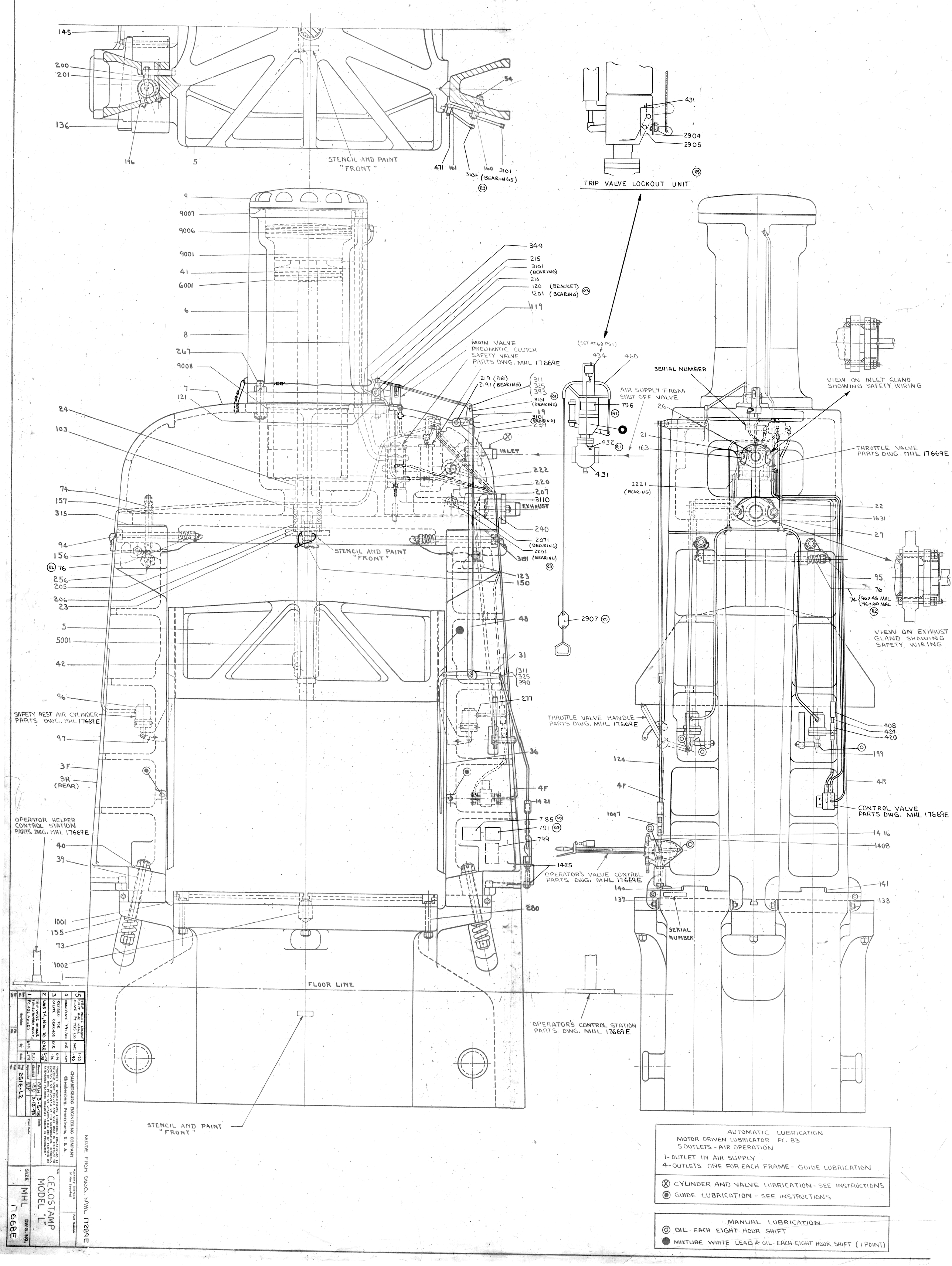
145
200
201
136
196
5
STENCIL AND PAINT "FRONT"
54
471
161
3101
160
3101 (BEARINGS)
R23
431
2904
2905
R5
TRIP VALVE LOCKOUT UNIT
9
9007
9006
9001
41
6001
6
8
267
9008
7
121
24
103
74
157
315
94
156
R2 76
256
205
206
23
5
5001
42
96
SAFETY REST AIR CYLINDER PARTS DWG. MHL 17669E
97
3F
3R (REAR)
OPERATOR HELPER CONTROL STATION PARTS DWG. MHL 17669E
40
39
1001
155
73
1002
349
215
3101 (BEARING)
216
120 (BRACKET)
1201 (BEARING) R3
119
MAIN VALVE
PNEUMATIC CLUTCH
SAFETY VALVE
PARTS DWG. MHL 17669E
219 (PIN)
2191 (BEARING)
311
325
393
R3
3101 (BEARING)
19
3101 (BEARING)
239
INLET
222
220
207
3110
EXHAUST
240
2071 (BEARING)
2201 (BEARING)
3151
R3
123
150
STENCIL AND PAINT "FRONT"
48
31
311
325
390
277
36
4F
1421
785 R5
791 R4
799
1425
280
FLOOR LINE
STENCIL AND PAINT "FRONT"
(SET AT 60 PSI)
434
460
796
R1
432 R1
431
AIR SUPPLY FROM SHUT OFF VALVE
2907 R5
OPERATOR'S CONTROL STATION PARTS DWG. MHL 17669E
SERIAL NUMBER
26
21
163
2221 (BEARING)
THROTTLE VALVE HANDLE PARTS DWG. MHL 17669E
124
4F
1047
140
137
SERIAL NUMBER
VIEW ON INLET GLAND SHOWING SAFETY WIRING
THROTTLE VALVE PARTS DWG. MHL 17669E
22
1631
27
95
76
74 96x48 MHL 96x60 MHL
R2
VIEW ON EXHAUST GLAND SHOWING SAFETY WIRING
408
424
420
199
4R
CONTROL VALVE PARTS DWG. MHL 17669E
1416
1408
141
138
MADE FROM DWG. MHL 17289E
AUTOMATIC LUBRICATION
MOTOR DRIVEN LUBRICATOR PC. 83
5 OUTLETS - AIR OPERATION
1- OUTLET IN AIR SUPPLY
4- OUTLETS ONE FOR EACH FRAME - GUIDE LUBRICATION
CYLINDER AND VALVE LUBRICATION - SEE INSTRUCTIONS
GUIDE LUBRICATION - SEE INSTRUCTIONS
MANUAL LUBRICATION
OIL - EACH EIGHT HOUR SHIFT
MIXTURE WHITE LEAD & OIL - EACH EIGHT HOUR SHIFT (1 POINT)
5 TRIP VALVE LOCKOUT UNIT AND NAME PLATE PY 785 ADD. DAR 1-22-90
4 NAME PLATE 791 ADD DAR 11-5-89
3 REVISED FOR OILITE BEARINGS DAR 10-16-86
2 WAS 14, NOW 16 DAR 5-29-81
1 TRIP VALVE HANDLE TURNED TOWARD INLET, PC. 432 ADDED DPR 2-27-79
Rev. No. Revision By Date
CHAMBERSBURG ENGINEERING COMPANY
Chambersburg, Pennsylvania, U. S. A.
"PROPERTY OF CHAMBERSBURG ENGINEERING COMPANY-TO BE RETURNED UPON REQUEST AND USED ONLY IN REFERENCE TO CONTRACT OR PURCHASE ORDER. REPRODUCTION OR THE PRINT OR UNAUTHORIZED USE OF PATENTED OR PATENTABLE FEATURES DISCLOSED HEREIN IS PROHIBITED."
Drawn GRH 3-5-73
Checked LBD 3-12-73
Approved
Scale —
Machining Tolerances If Not Specified
Part Number
Title CECOSTAMP MODEL "L"
Size MHL
DWG. NO. 17668E
Drawing No. 2516-L2
Part No.
Print Date

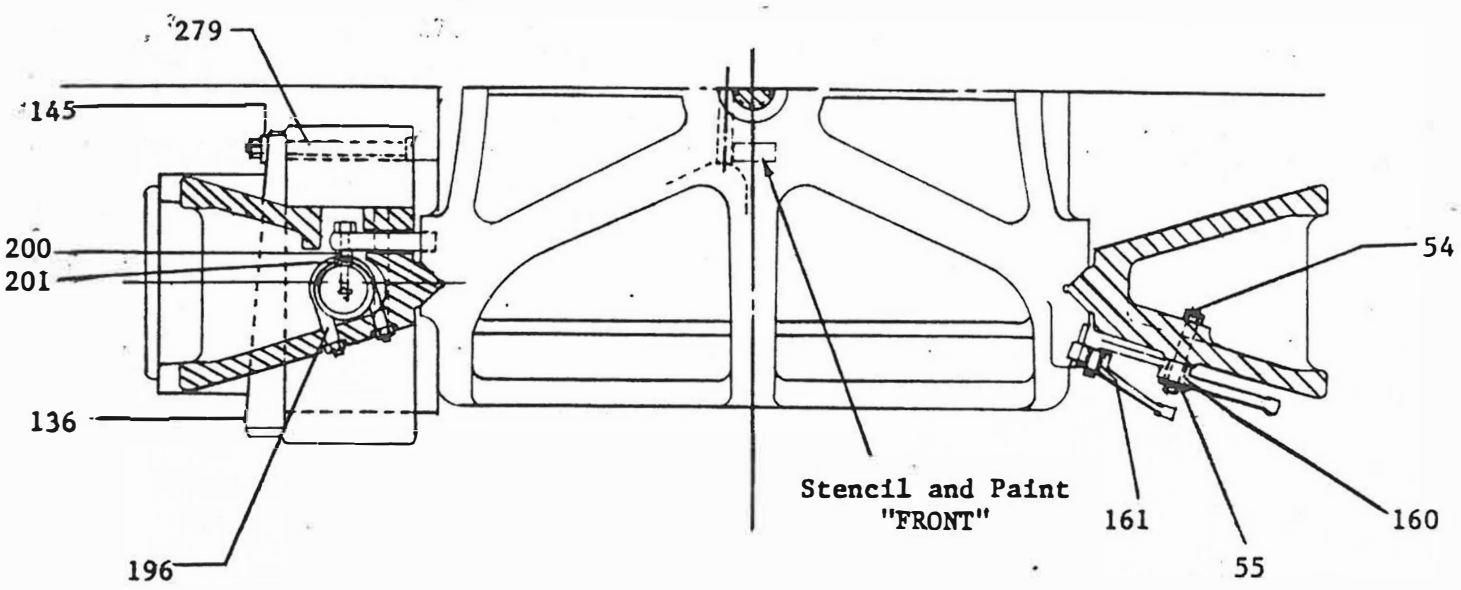

ADJUSTING WEDGE, SAFETY REST CYLINDER, AND
FRAME MOUNTED LINKAGE ARRANGEMENTS

SECTION X - PARTS LISTS AND LINE DRAWINGS

OPERATOR CONTROLS

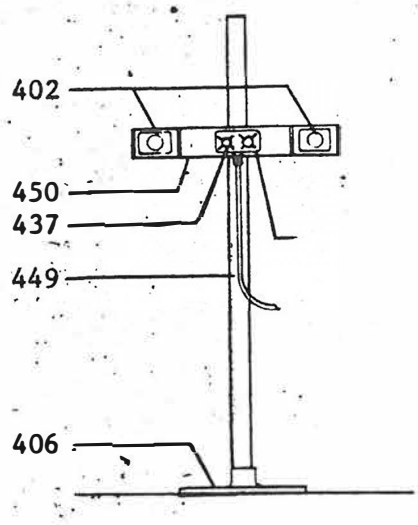

HELPER'S CONTROL STATION
UNIT 9300

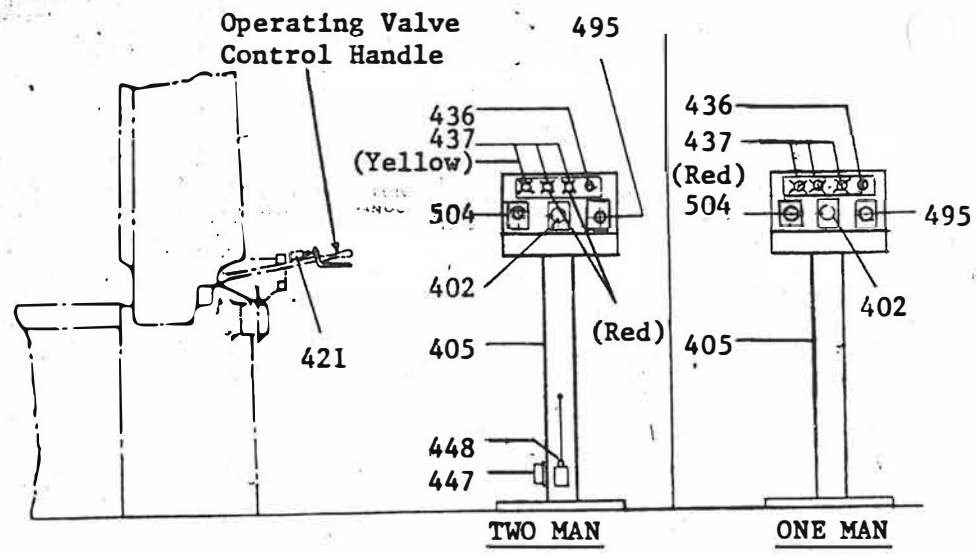

OPERATOR'S CONTROL STATION
Unit 9200

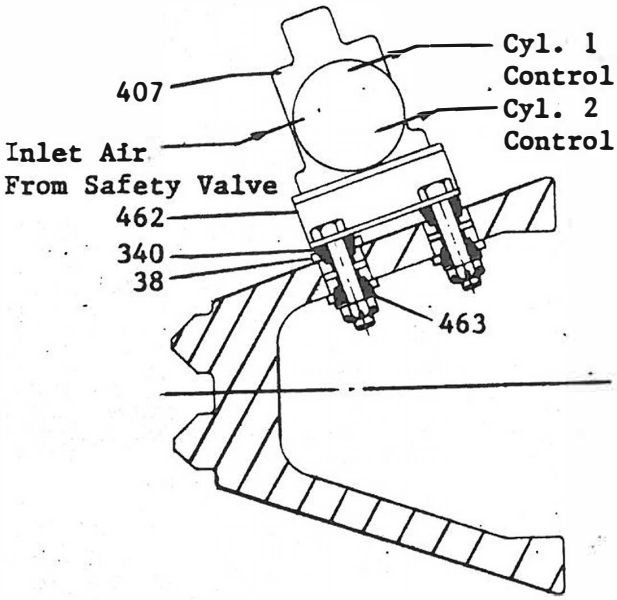

30 x 24

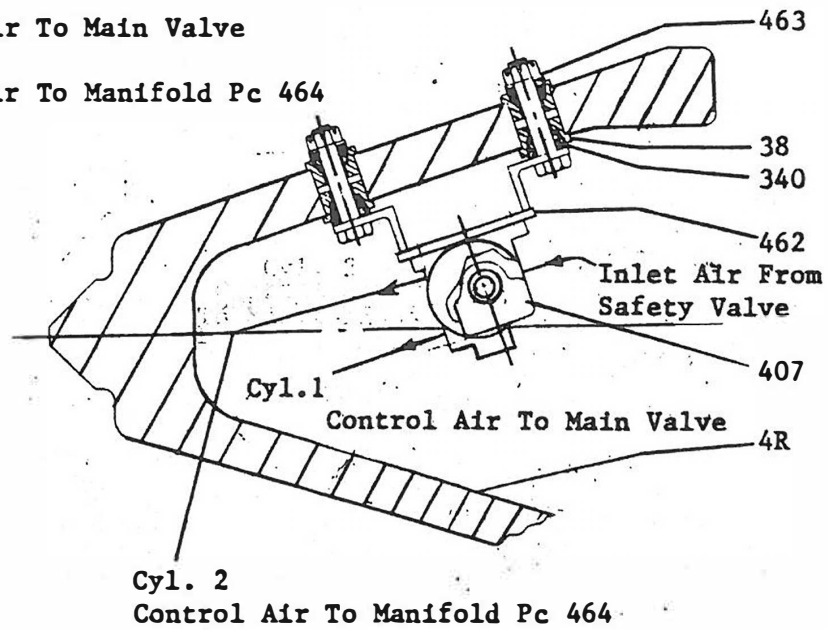

48 x 36 AND LARGER SIZES

DIRECTIONAL VALVE ARRANGEMENT

SECTION X - PARTS LISTS AND LINE DRAWINGS

THROTTLE VALVE HANDLE ARRANGEMENT

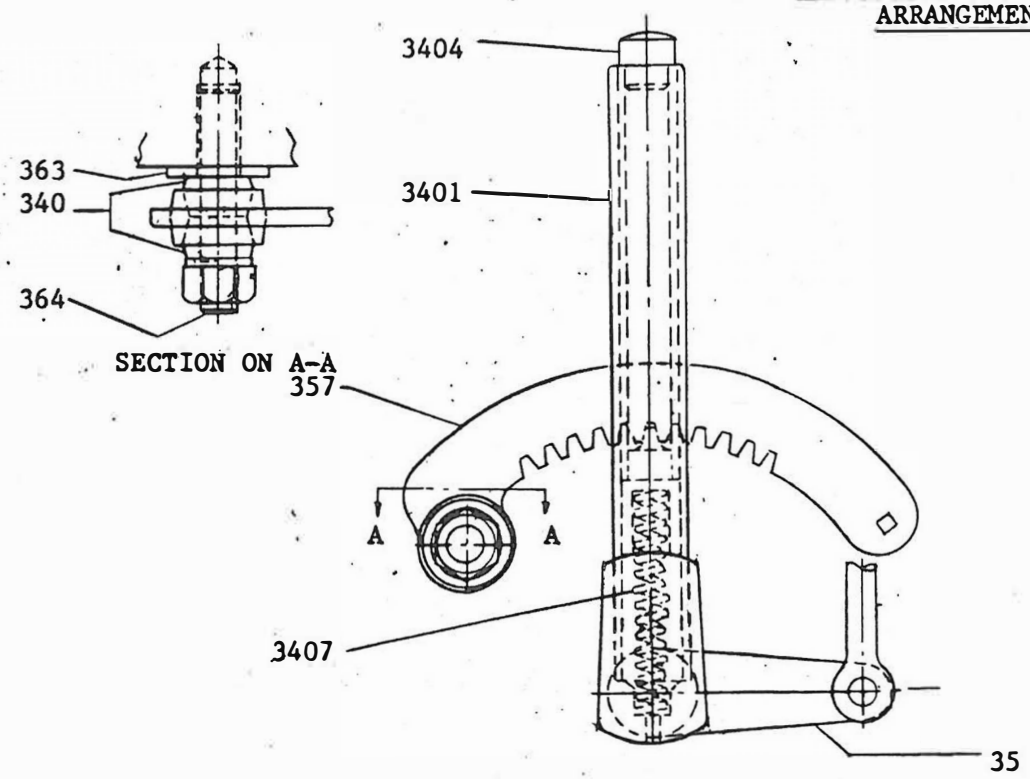

30 x 24 MODEL "L" CECOSTAMP

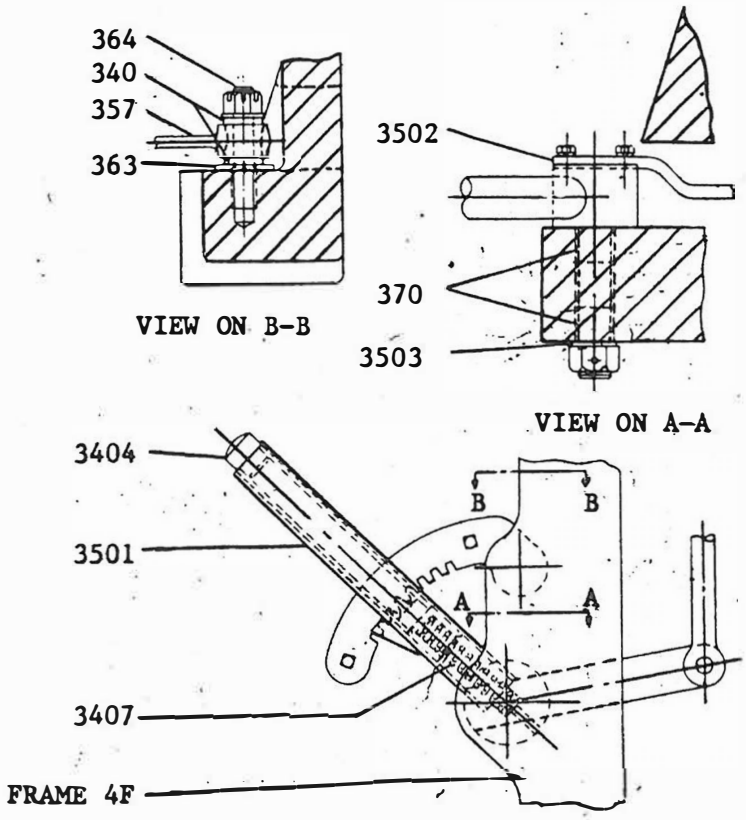

48 x 36 MODEL "L" CECOSTAMP AND LARGER SIZES

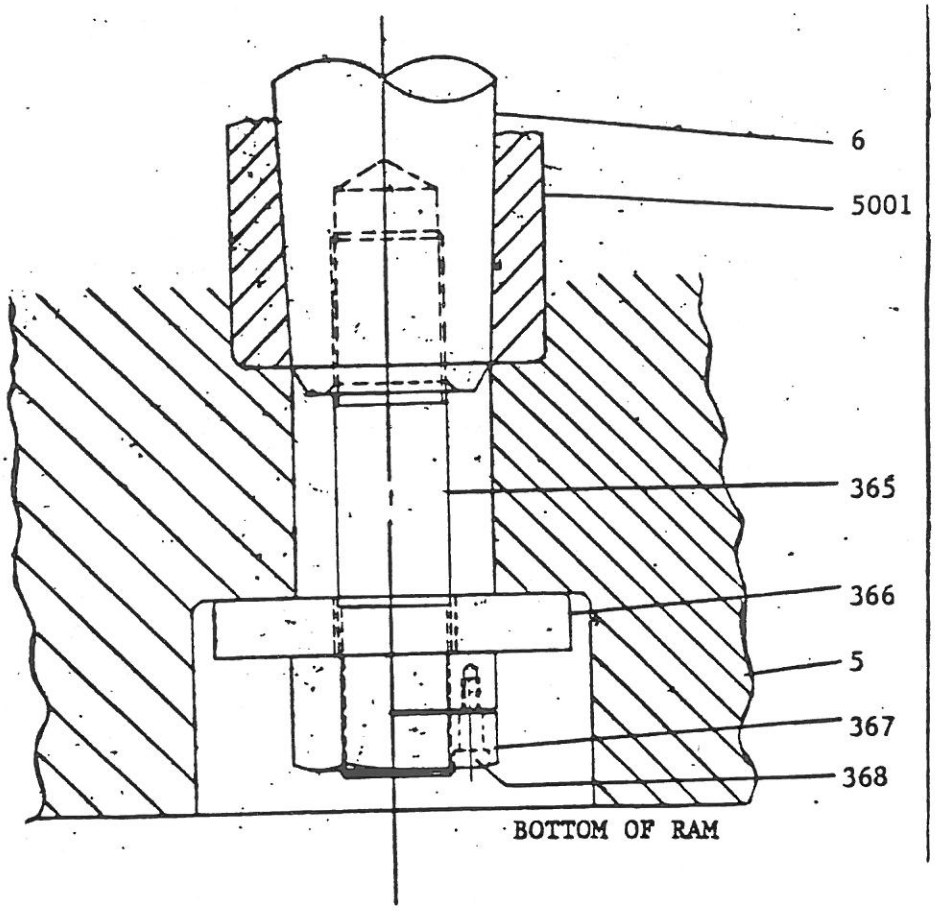

ROD HOLDING DEVICE
96 x 48 MODEL "L" CECOSTAMP AND
LARGER SIZES

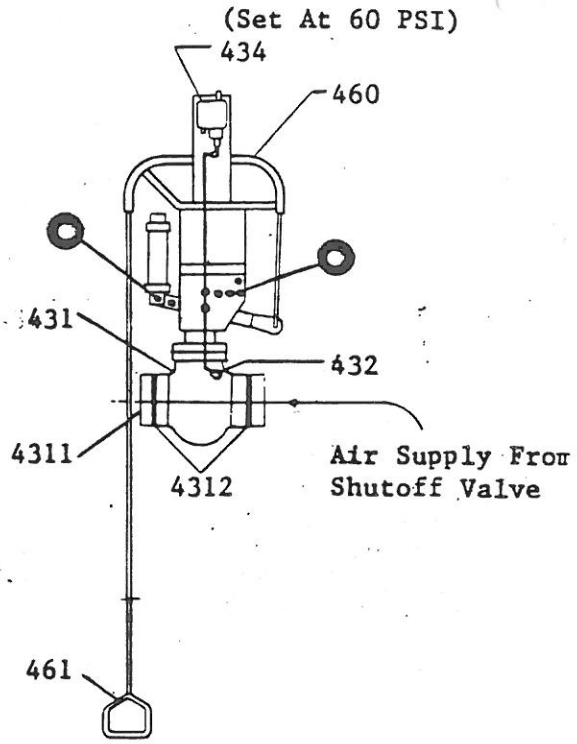

TRIP VALVE, 431

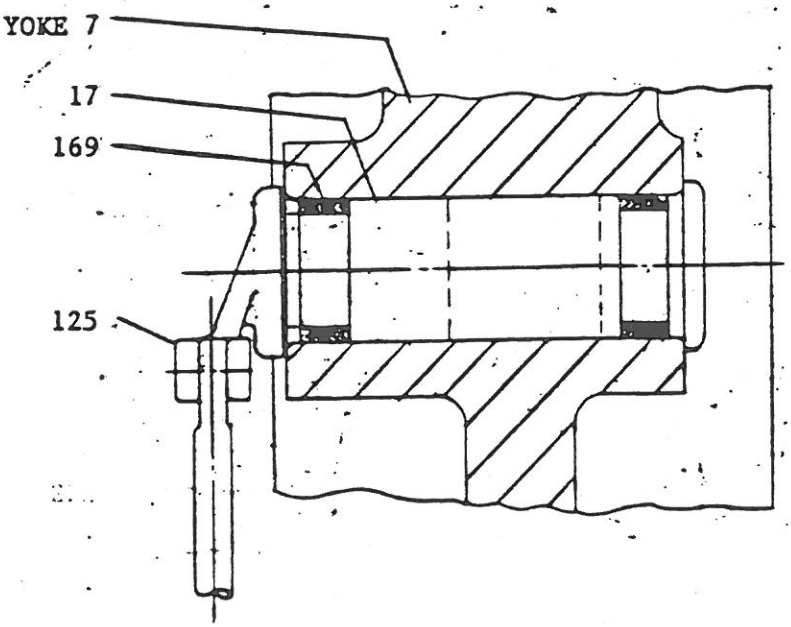

THROTTLE VALVE ARRANGEMENT

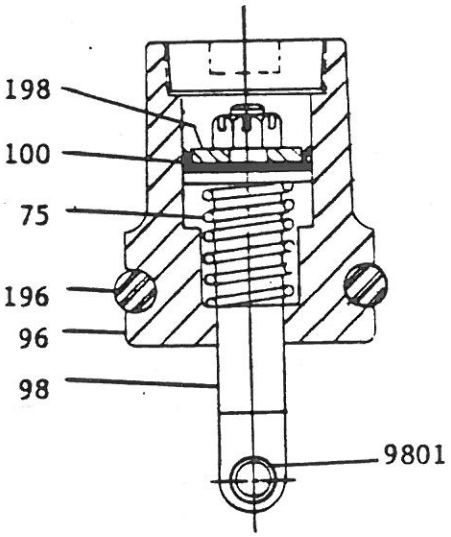

RAM SAFETY REST
CYLINDER

OPERATING CONTROL
HANDLE ARRANGEMENT

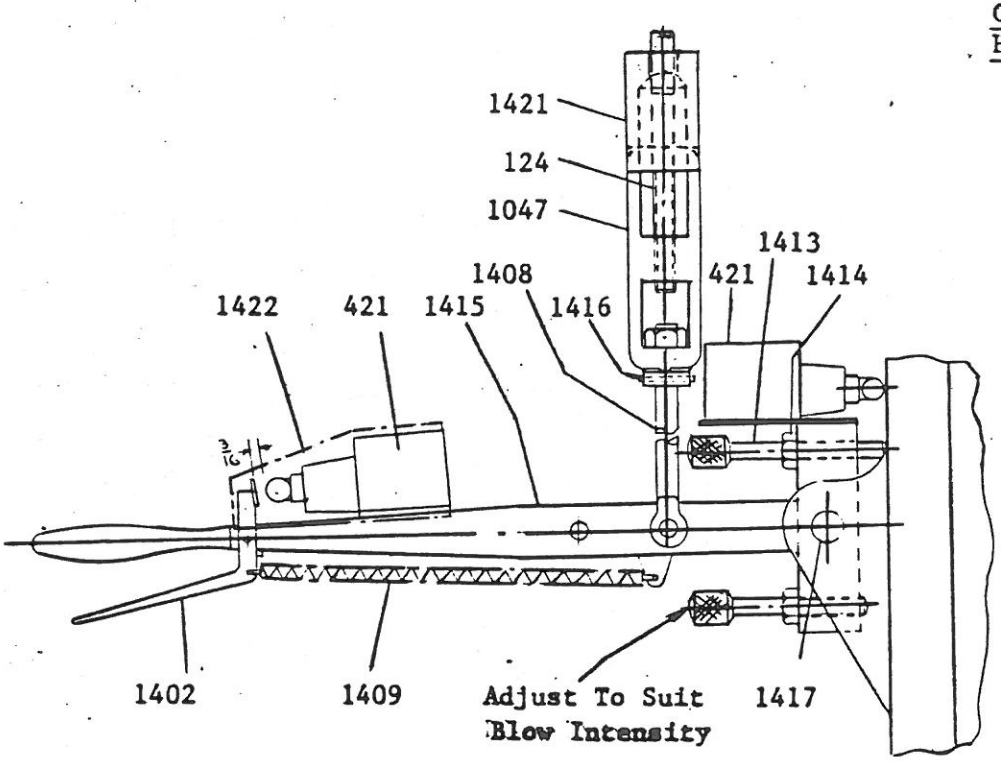

30 x 24 MODEL "L" CECOSTAMP

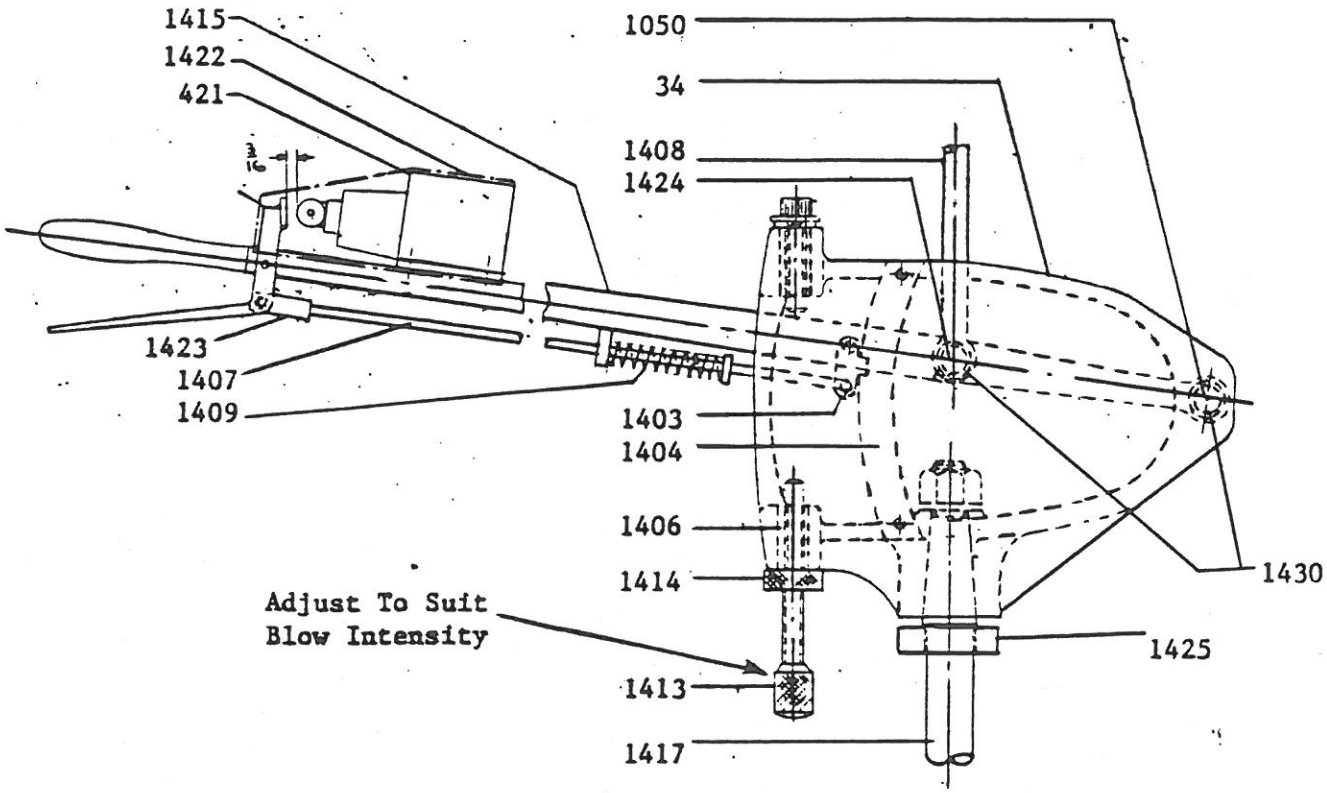

48 x 36 MODEL "L" CECOSTAMP AND LARGER SIZES

SECTION X - PARTS LISTS AND LINE DRAWINGS

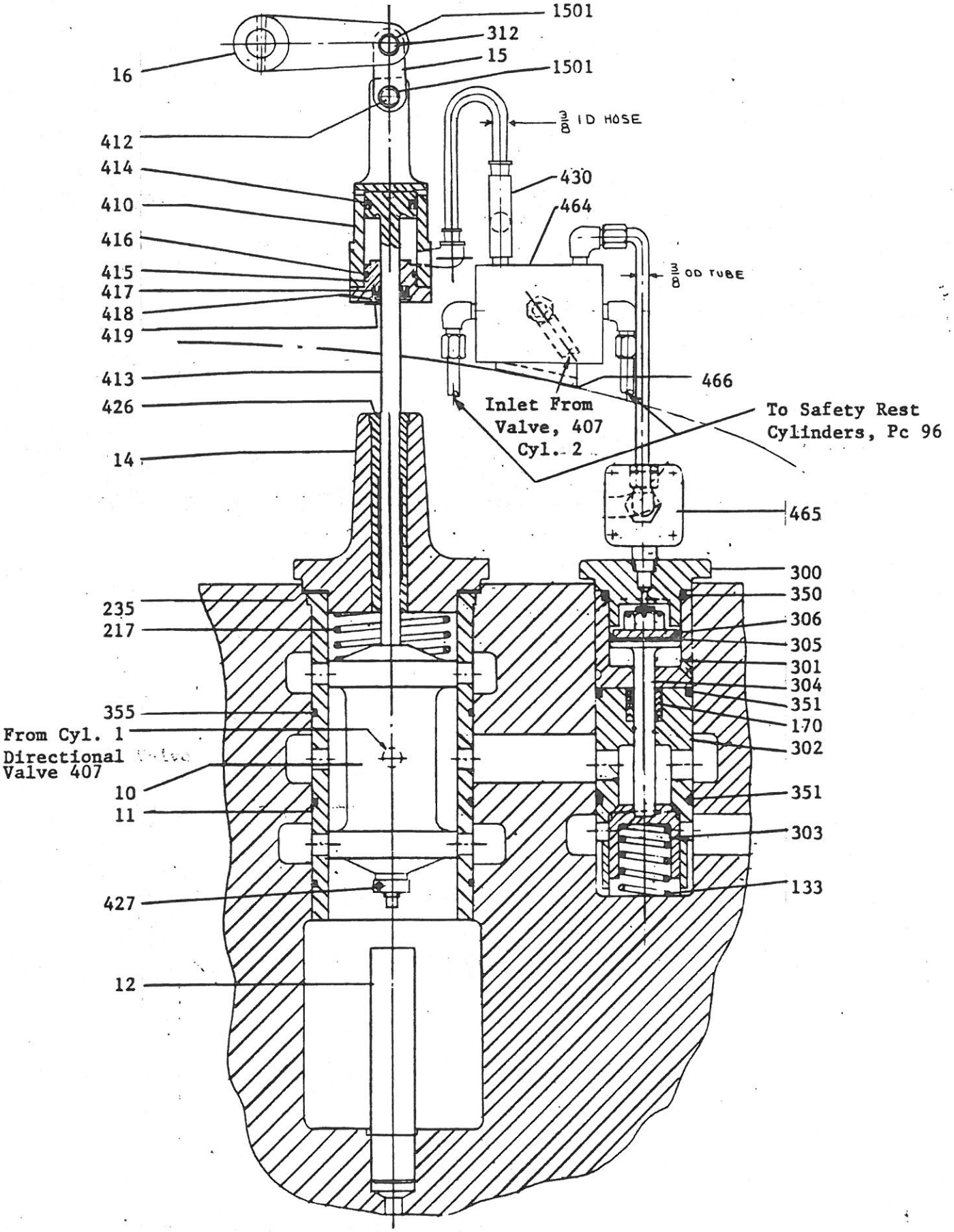

PNEUMATIC CLUTCH, MAIN VALVE AND SAFETY VALVE ARRANGEMENT

30 x 24 MODEL "L" CECOSTAMP

SECTION X - PARTS LISTS AND LINE DRAWINGS

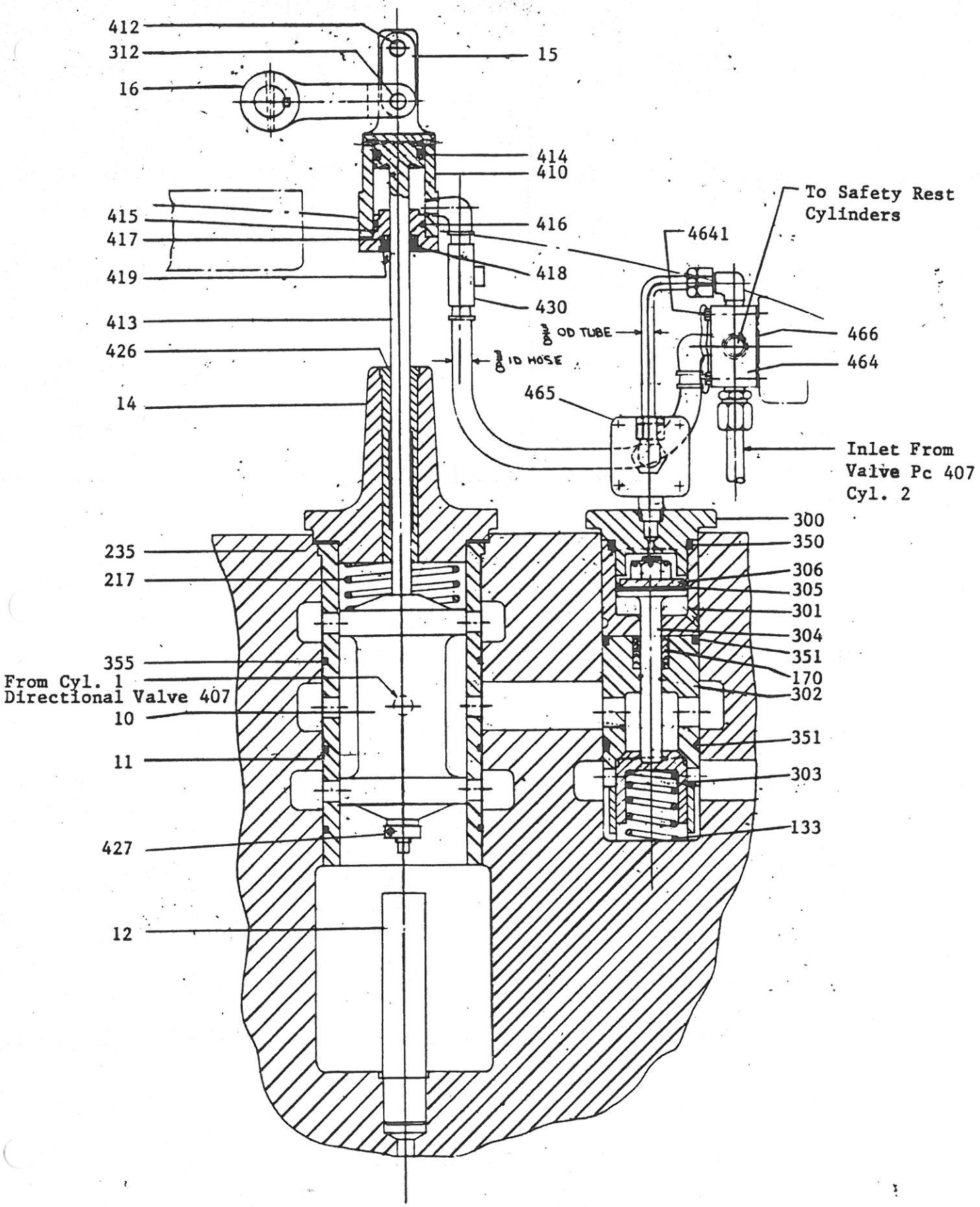

PNEUMATIC CLUTCH, MAIN VALVE AND SAFETY VALVE ARRANGEMENT

48 x 36 MODEL "L" CECOSTAMP AND LARGER SIZES

SECTION X - PARTS LISTS AND LINE DRAWINGS

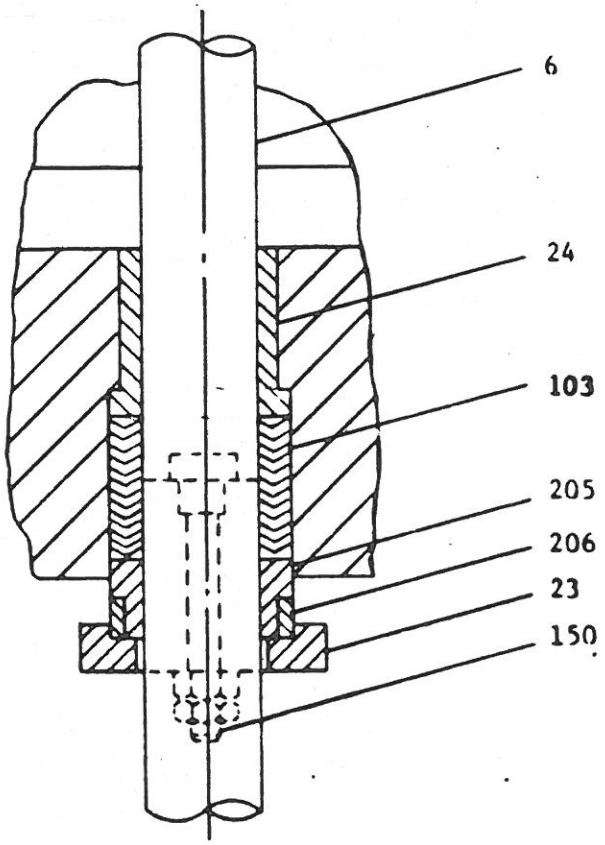

PISTON GLAND AND PACKING ARRANGEMENT

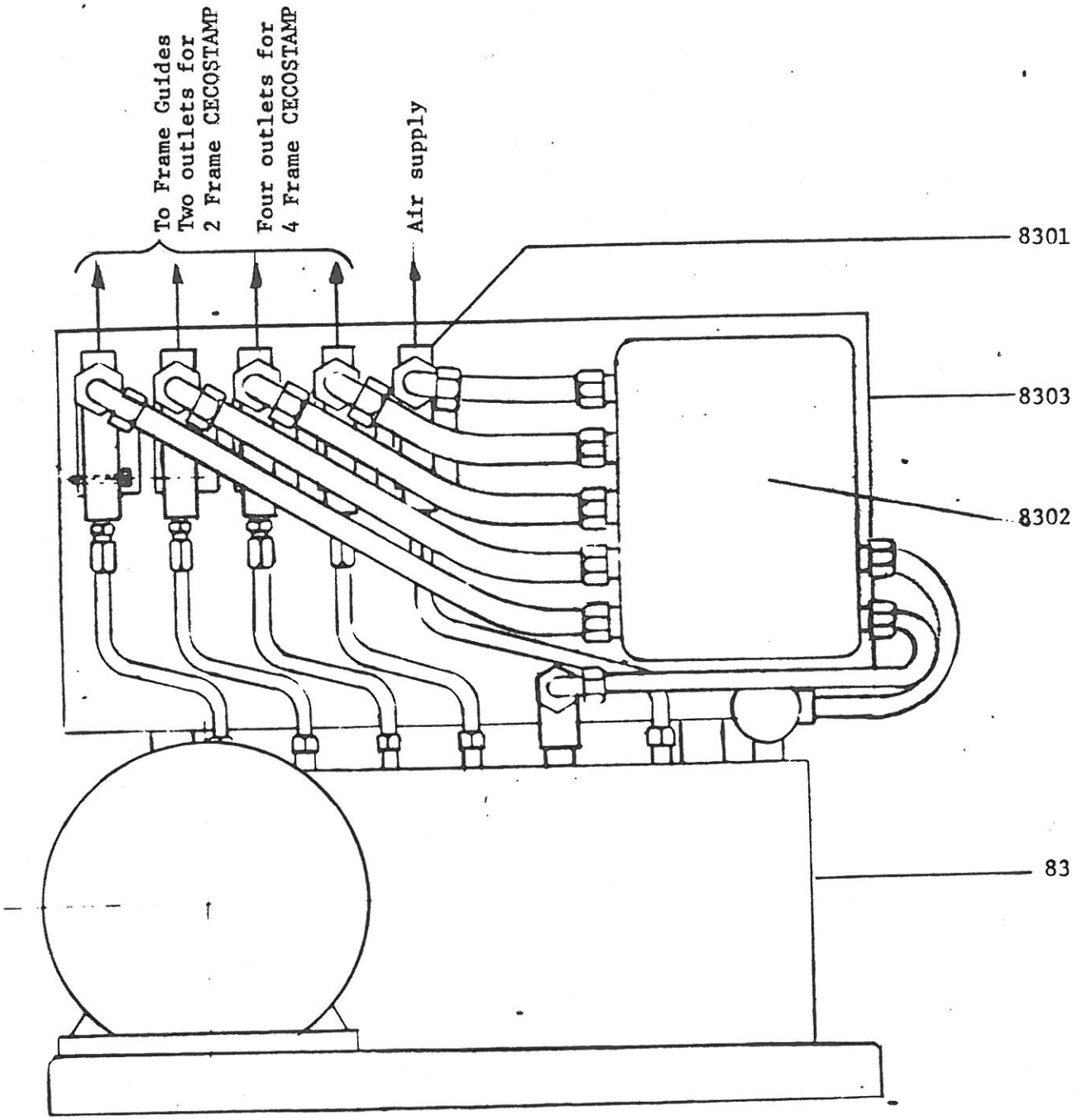

Lubrication Alarm System
(Extra cost feature)

SECTION X - PARTS LIST AND LINE DRAWINGS

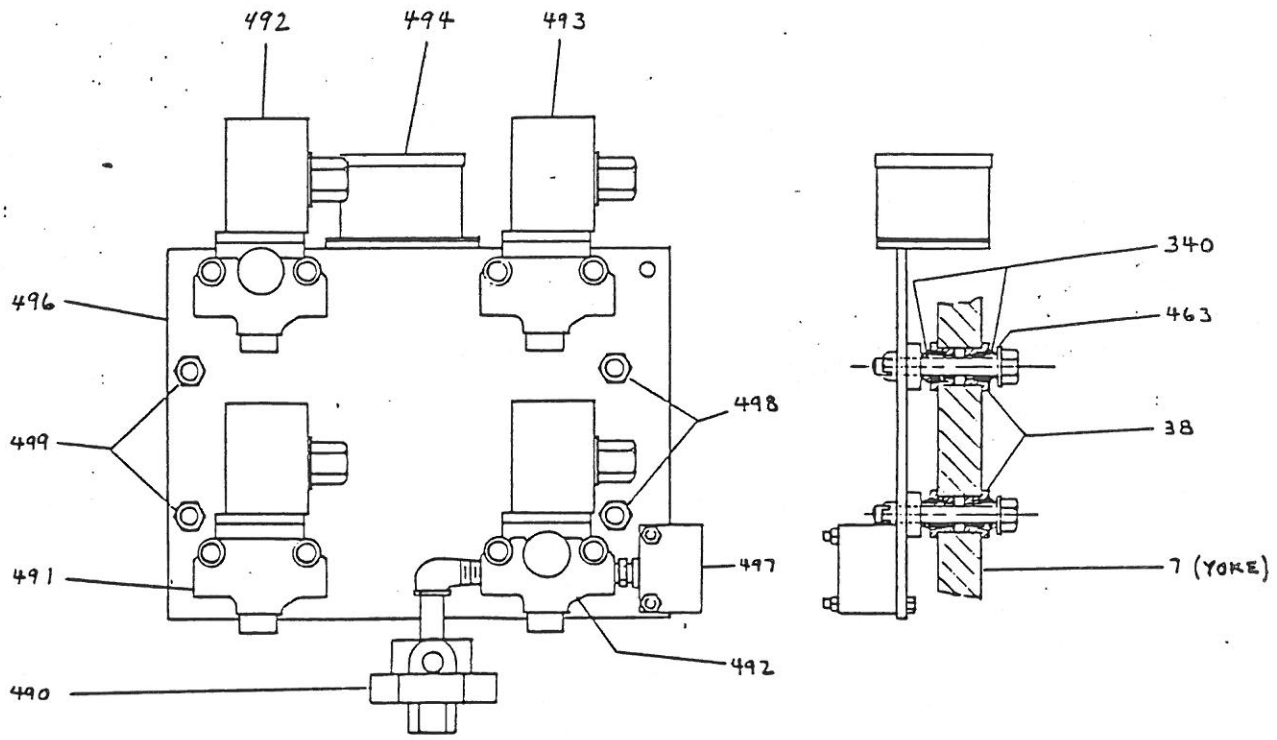

DUAL MODE CONTROL ARRANGEMENT

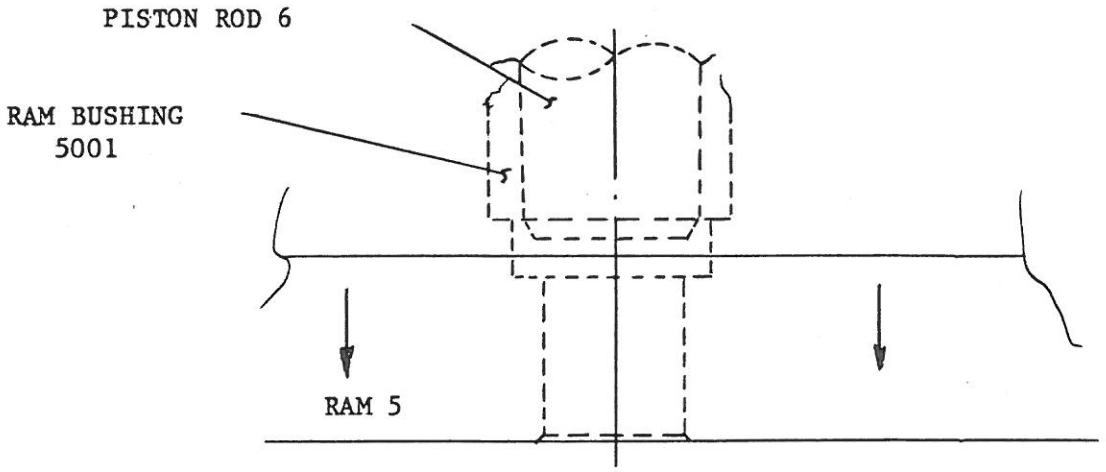

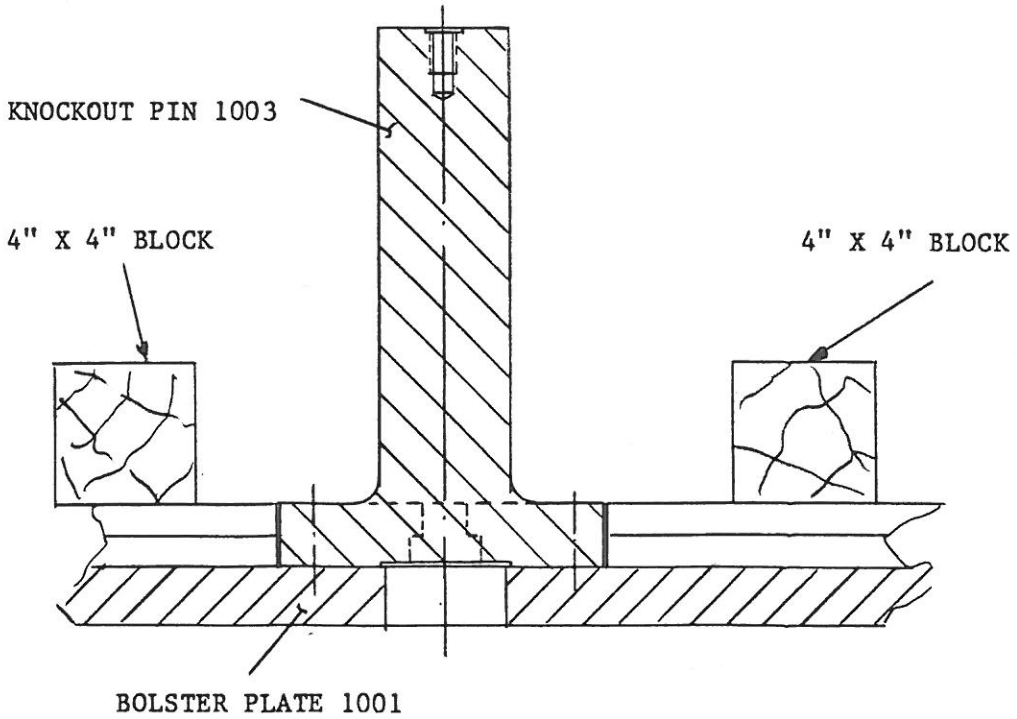

KNOCKOUT PIN ARRANGEMENT

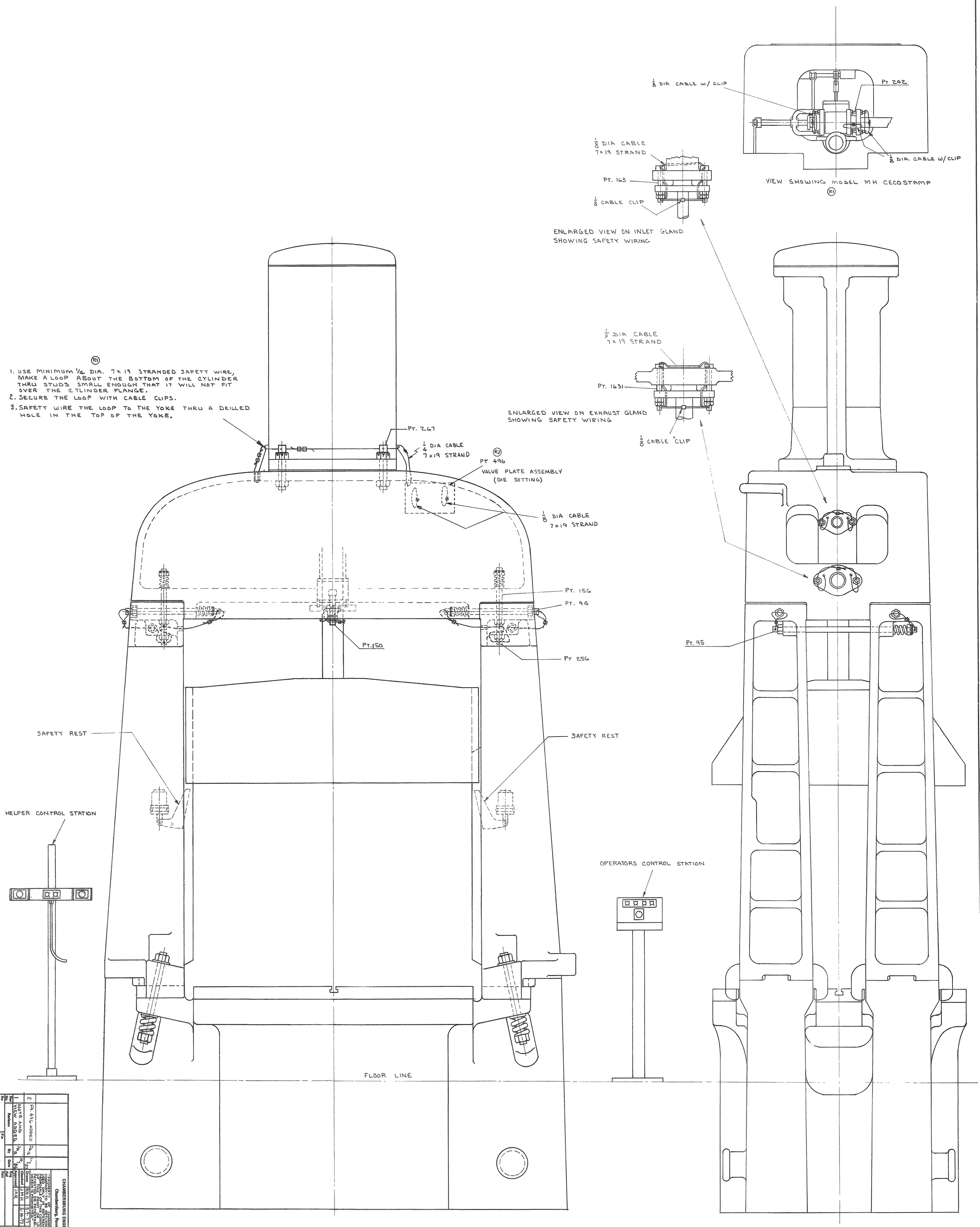

NOTE:
ALL SAFETY CABLE TO BE 1/4 DIA. 7 x 19 STRAND
UNLESS OTHERWISE NOTED

Rev No.	Revision	By	Date	Eng Appr.	Part No.
2	PT. 496 ADDED	DAR	1-25-87		
1	NOTE AND VIEW ADDED	JAR	10-8-86		

CHAMBERSBURG ENGINEERING COMPANY
Chambersburg, Pennsylvania, U. S. A.

"PROPERTY OF CHAMBERSBURG ENGINEERING COMPANY. LOANED FOR REFERENCE TO CONTRACTS OR USED ONLY IN CONNECTION WITH THE ERECTION OF THIS PRINT OR UNAUTHORIZED USE OF PATENTS OR PATENTABLE FEATURES DISCLOSED HEREIN IS PROHIBITED."

Drawn: RNH 3-9-77
Checked: JMH 3-16-77
Approved: JAR
Scale: ~
Print Date

Machining Tolerance If Not Specified

Part Number

Title: SAFETY CABLE DIAGRAM 4-FRAME-CECOSTAMPS MODEL "L"

SIZE

DRAWING NUMBER: MHL 21894E